UNIVERSITY OF CAMBRIDGE INTERNATIONAL EXAMINATIONS
General Certificate of Education
Advanced Subsidiary Level and Advanced Level

PHYSICS **9702/01**

Paper 1 Multiple Choice **May/June 2008**

1 hour

Additional Materials: Multiple Choice Answer Sheet
Soft clean eraser
Soft pencil (type B or HB is recommended)

* 2 5 1 4 5 3 9 4 4 3 *

READ THESE INSTRUCTIONS FIRST

Write in soft pencil.
Do not use staples, paper clips, highlighters, glue or correction fluid.
Write your name, Centre number and candidate number on the Answer Sheet in the spaces provided unless this has been done for you.

There are **forty** questions on this paper. Answer **all** questions. For each question there are four possible answers **A**, **B**, **C** and **D**.
Choose the **one** you consider correct and record your choice in **soft pencil** on the separate Answer Sheet.

Read the instructions on the Answer Sheet very carefully.

Each correct answer will score one mark. A mark will not be deducted for a wrong answer.
Any rough working should be done in this booklet.

This document consists of **19** printed pages and **1** blank page.

© UCLES 2008

Data

speed of light in free space,	$c = 3.00 \times 10^{8}\,\text{m s}^{-1}$
permeability of free space,	$\mu_0 = 4\pi \times 10^{-7}\,\text{H m}^{-1}$
permittivity of free space,	$\varepsilon_0 = 8.85 \times 10^{-12}\,\text{F m}^{-1}$
elementary charge,	$e = 1.60 \times 10^{-19}\,\text{C}$
the Planck constant,	$h = 6.63 \times 10^{-34}\,\text{J s}$
unified atomic mass constant,	$u = 1.66 \times 10^{-27}\,\text{kg}$
rest mass of electron,	$m_\text{e} = 9.11 \times 10^{-31}\,\text{kg}$
rest mass of proton,	$m_\text{p} = 1.67 \times 10^{-27}\,\text{kg}$
molar gas constant,	$R = 8.31\,\text{J K}^{-1}\,\text{mol}^{-1}$
the Avogadro constant,	$N_\text{A} = 6.02 \times 10^{23}\,\text{mol}^{-1}$
the Boltzmann constant,	$k = 1.38 \times 10^{-23}\,\text{J K}^{-1}$
gravitational constant,	$G = 6.67 \times 10^{-11}\,\text{N m}^2\,\text{kg}^{-2}$
acceleration of free fall,	$g = 9.81\,\text{m s}^{-2}$

© UCLES 2008

Formulae

uniformly accelerated motion, $s = ut + \frac{1}{2}at^2$

$v^2 = u^2 + 2as$

work done on/by a gas, $W = p\Delta V$

gravitational potential, $\phi = -\frac{Gm}{r}$

hydrostatic pressure, $p = \rho gh$

pressure of an ideal gas, $p = \frac{1}{3}\frac{Nm}{V}\langle c^2 \rangle$

simple harmonic motion, $a = -\omega^2 x$

velocity of particle in s.h.m., $v = v_0 \cos \omega t$

$v = \pm \omega \sqrt{(x_0^2 - x^2)}$

electric potential, $V = \frac{Q}{4\pi\varepsilon_0 r}$

capacitors in series, $1/C = 1/C_1 + 1/C_2 + \ldots$

capacitors in parallel, $C = C_1 + C_2 + \ldots$

energy of charged capacitor, $W = \frac{1}{2}QV$

resistors in series, $R = R_1 + R_2 + \ldots$

resistors in parallel, $1/R = 1/R_1 + 1/R_2 + \ldots$

alternating current/voltage, $x = x_0 \sin \omega t$

radioactive decay, $x = x_0 \exp(-\lambda t)$

decay constant, $\lambda = \frac{0.693}{t_{\frac{1}{2}}}$

© UCLES 2008

1 Five energies are listed.

5 kJ

5 mJ

5 MJ

5 nJ

Starting with the smallest first, what is the order of increasing magnitude of these energies?

A 5 kJ → 5 mJ → 5 MJ → 5 nJ

B 5 nJ → 5 kJ → 5 MJ → 5 mJ

C 5 nJ → 5 mJ → 5 kJ → 5 MJ

D 5 mJ → 5 nJ → 5 kJ → 5 MJ

2 Which of the following correctly expresses the volt in terms of SI base units?

A $\mathrm{A\,\Omega}$

B $\mathrm{W\,A^{-1}}$

C $\mathrm{kg\,m^2\,s^{-1}\,A^{-1}}$

D $\mathrm{kg\,m^2\,s^{-3}\,A^{-1}}$

3 What is a reasonable estimate of the average kinetic energy of an athlete during a 100 m race that takes 10 s?

A 40 J **B** 400 J **C** 4000 J **D** 40 000 J

4 The resistance R of a resistor is determined by measuring the potential difference V across it and the current I in it. The value of R is then calculated using the equation

$$R = \frac{V}{I}.$$

The values measured are $V = 1.00 \pm 0.05$ V and $I = 0.50 \pm 0.01$ A.

What is the percentage uncertainty in the value of R?

A 2.5 % **B** 3.0 % **C** 7.0 % **D** 10.0 %

© UCLES 2008

5 Four students each made a series of measurements of the acceleration of free fall *g*. The table shows the results obtained.

Which set of results could be described as precise but **not** accurate?

	g / m s^{-2}			
A	9.81	9.79	9.84	9.83
B	9.81	10.12	9.89	8.94
C	9.45	9.21	8.99	8.76
D	8.45	8.46	8.50	8.41

6 An object accelerates in a direction that is always perpendicular to its motion.

What is the effect, if any, of the acceleration on the object's speed and direction?

	speed	direction
A	changes	changes
B	changes	constant
C	constant	changes
D	constant	constant

7 The acceleration of free fall on a planet P is $\frac{1}{6}$ of the acceleration of free fall on Earth.

The mass of a body on planet P is 30 kg.

What is its weight on planet P?

A 4.9 N **B** 49 N **C** 180 N **D** 290 N

© UCLES 2008

8 A football is dropped from the top of a tall building.

Which acceleration-time graph best represents the motion of the football through the air?

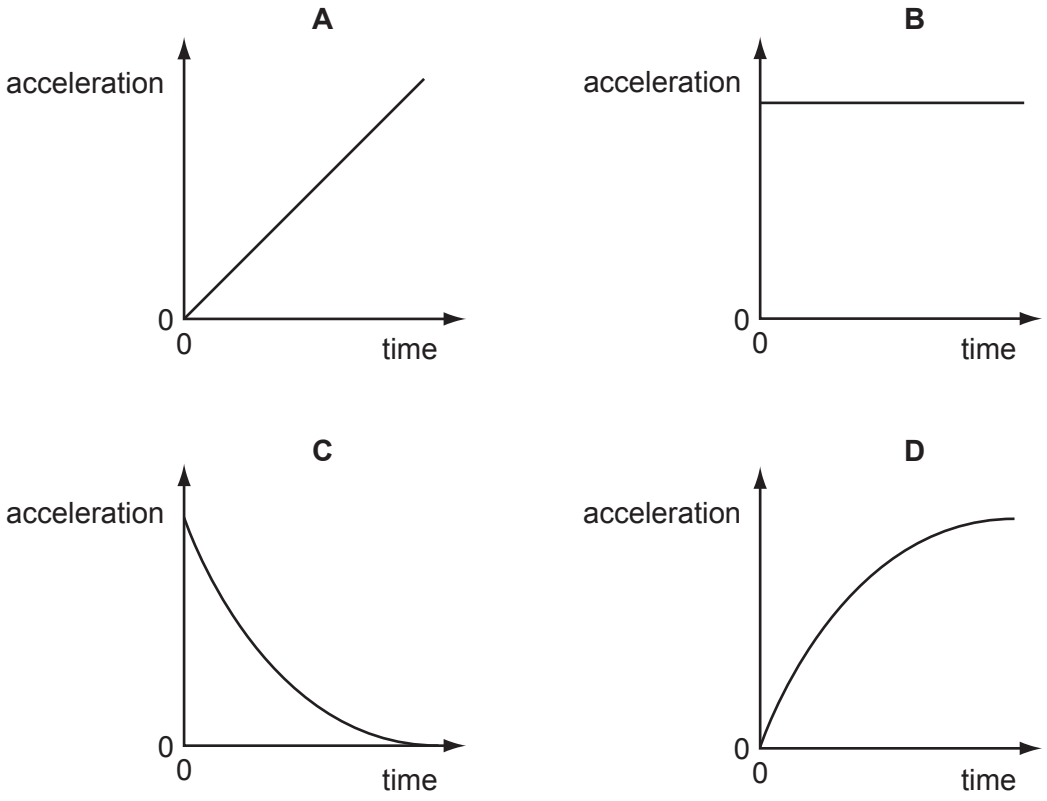

9 Which is a statement of the principle of conservation of momentum?

A Momentum is the product of mass and velocity.

B Momentum is conserved only in elastic collisions.

C Momentum is conserved by all bodies in a collision.

D Momentum is conserved providing no external forces act.

© UCLES 2008

10 Two equal masses X and Y are moving towards each other on a frictionless air track as shown. The masses make an elastic collision.

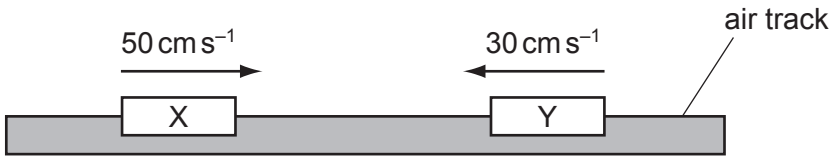

Which row gives possible velocities for the two masses after the collision?

	velocity of X	velocity of Y
A	zero	20 cm s^{-1} to the right
B	10 cm s^{-1} to the right	10 cm s^{-1} to the right
C	20 cm s^{-1} to the left	zero
D	30 cm s^{-1} to the left	50 cm s^{-1} to the right

11 A car of mass 750 kg has a horizontal driving force of 2.0 kN acting on it. It has a forward horizontal acceleration of 2.0 m s^{-2}.

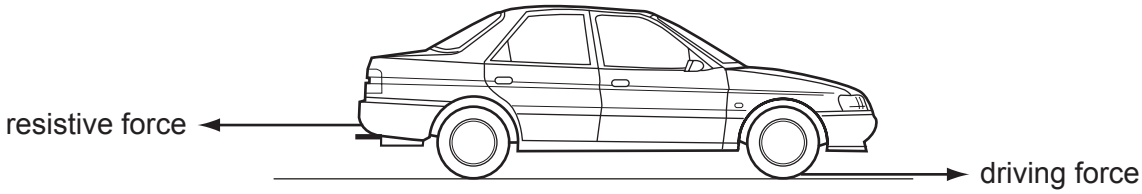

What is the resistive force acting horizontally?

A 0.5 kN **B** 1.5 kN **C** 2.0 kN **D** 3.5 kN

12 A ball is falling at terminal speed in still air. The forces acting on the ball are upthrust, viscous drag and weight.

What is the order of increasing magnitude of these three forces?

A upthrust → viscous drag → weight

B viscous drag → upthrust → weight

C viscous drag → weight → upthrust

D weight → upthrust → viscous drag

© UCLES 2008

13 Two rigid rods, XZ and YZ, are fixed to a vertical wall at points X and Y.

A load of weight *W* is hung from point Z.

The load is not moving.

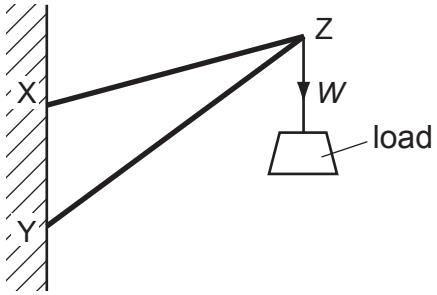

Which diagram shows the forces acting at point Z?

A

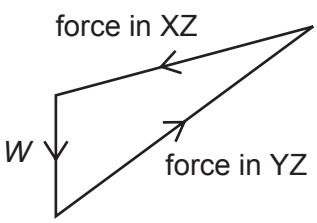

B

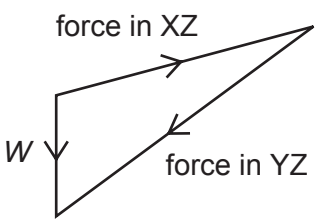

C

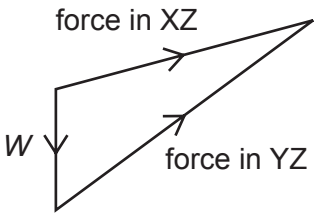

D

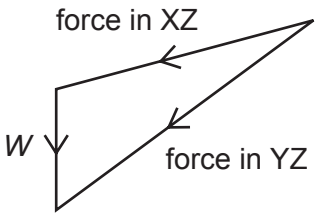

© UCLES 2008

14 A uniform ladder rests against a vertical wall where there is negligible friction. The bottom of the ladder rests on rough ground where there is friction. The top of the ladder is at a height h above the ground and the foot of the ladder is at a distance $2a$ from the wall.

The diagram shows the forces which act on the ladder.

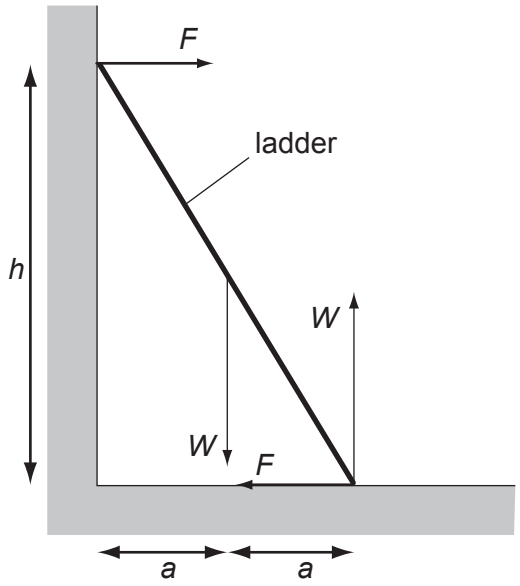

Which equation is formed by taking moments?

A $Wa + Fh = 2Wa$

B $Fa + Wa = Fh$

C $Wa + 2Wa = Fh$

D $Wa - 2Wa = 2Fh$

15 A submarine is in equilibrium in a fully submerged position.

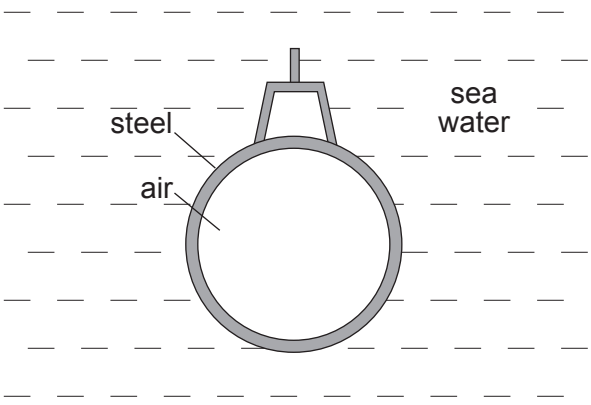

What causes the upthrust on the submarine?

A The air in the submarine is less dense than sea water.

B The sea water exerts a greater upward force on the submarine than the weight of the steel.

C The submarine displaces its own volume of sea water.

D There is a difference in water pressure acting on the top and bottom of the submarine.

16 A positive charge experiences a force *F* when placed at point X in a uniform electric field.

The charge is then moved from point X to point Y.

Distances *r* and *s* are shown on the diagram.

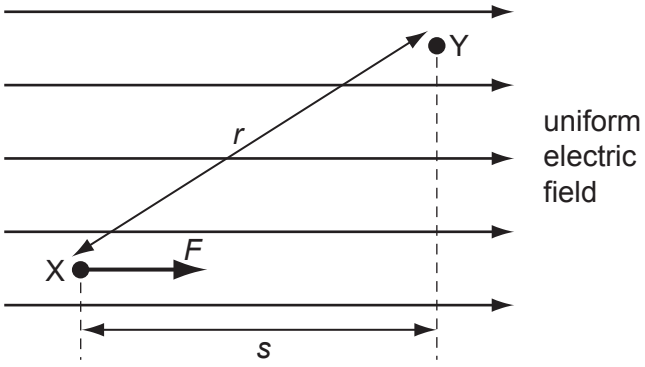

What is the change in the potential energy of the charge?

A decreases by *Fs*

B increases by *Fs*

C decreases by *Fr*

D increases by *Fr*

17 Which quantities are conserved in an inelastic collision?

	kinetic energy	total energy	linear momentum
A	conserved	not conserved	conserved
B	conserved	not conserved	not conserved
C	not conserved	conserved	conserved
D	not conserved	conserved	not conserved

18 A steel ball is falling at constant speed in oil.

Which graph shows the variation with time of the gravitational potential energy E_p and the kinetic energy E_k of the ball?

A

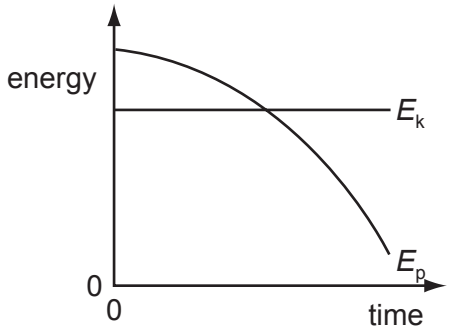

B

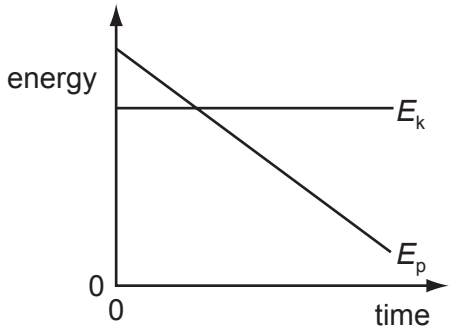

C

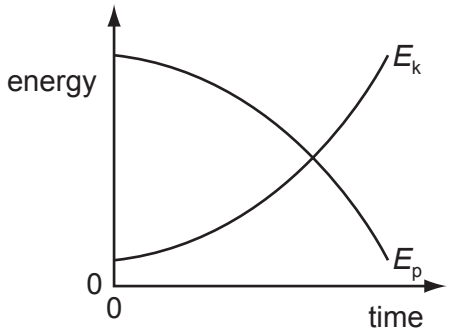

D

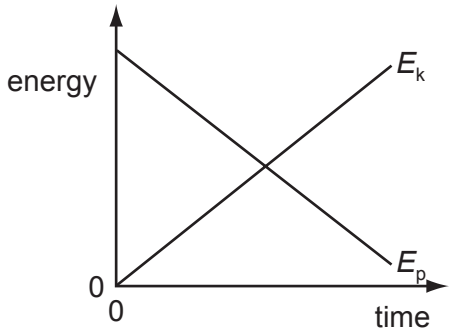

19 The total energy input E_{in} in a process is partly transferred to useful energy output U, and partly to energy that is wasted W.

What is the efficiency of the process?

A $\frac{U}{W} \times 100\,\%$

B $\frac{W}{E_{in}} \times 100\,\%$

C $\frac{U}{E_{in}} \times 100\,\%$

D $\frac{U+W}{E_{in}} \times 100\,\%$

20 Why does an ideal gas exert pressure on its container?

A The molecules of the gas collide continually with each other.

B The molecules of the gas collide continually with the walls of the container.

C The molecules of the gas collide inelastically with the walls of the container.

D The weight of the molecules exerts a force on the walls of the container.

21 The formula for hydrostatic pressure is $p = \rho gh$.

Which equation, or principle of physics, is used in the derivation of this formula?

A density = mass ÷ volume

B potential energy = mgh

C atmospheric pressure decreases with height

D density increases with depth

© UCLES 2008

22 A sample of metal is subjected to a force which increases to a maximum value and then decreases back to zero. A force-extension graph for the sample is shown.

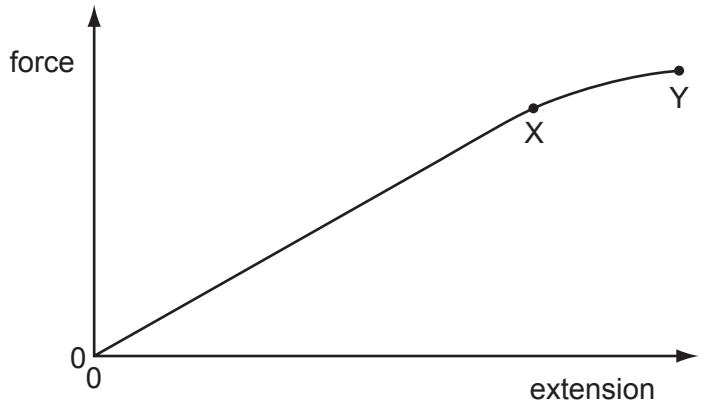

When the sample contracts it follows the same force-extension curve as when it was being stretched.

What is the behaviour of the metal between X and Y?

A both elastic and plastic

B elastic but not plastic

C plastic but not elastic

D not elastic and not plastic

23 A spring of original length 100 mm is compressed by a force. The graph shows the variation of the length *L* of the spring with the compressing force *F*.

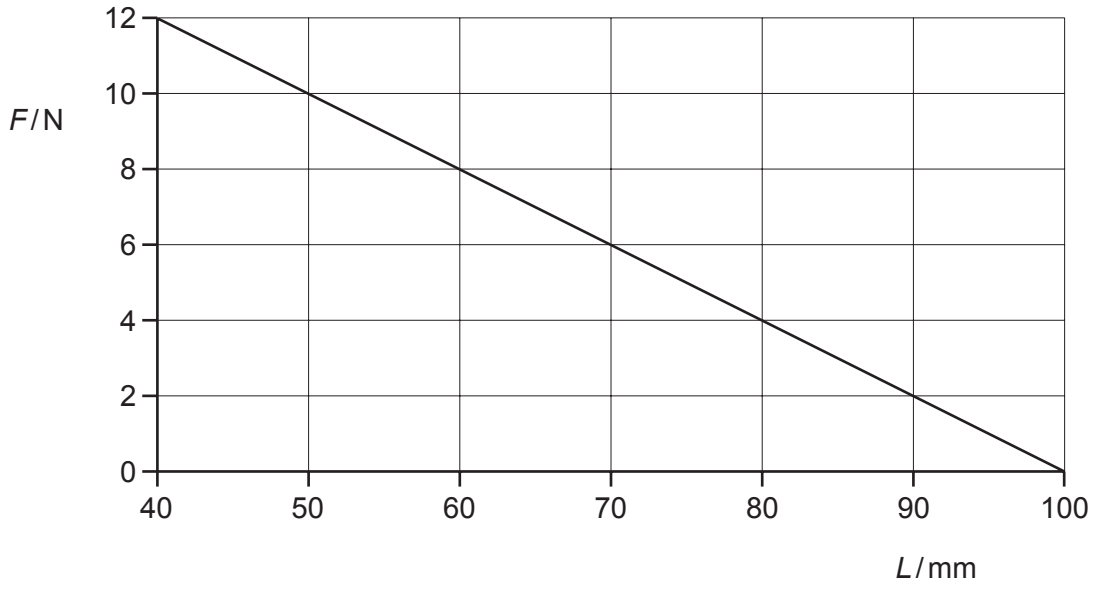

What is the energy stored in the spring when the length is 70 mm?

A 0.090 J **B** 0.21 J **C** 0.27 J **D** 0.63 J

24 The Young modulus of steel is determined using a length of steel wire and is found to have the value E.

Another experiment is carried out using a wire of the same steel, but of twice the length and half the diameter.

What value is obtained for the Young modulus in the second experiment?

A $\frac{1}{4}E$ **B** $\frac{1}{2}E$ **C** E **D** $2E$

25 The graph shows how the height of a water surface at a point in a harbour varies with time t as waves pass the point.

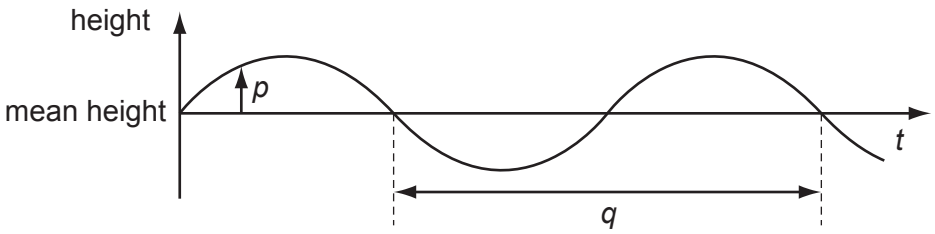

What are p and q?

	p	q
A	displacement	wavelength
B	displacement	period
C	amplitude	wavelength
D	amplitude	period

26 The intensity I of a sound at a point P is inversely proportional to the square of the distance x of P from the source of the sound. That is

$$I \propto \frac{1}{x^2}.$$

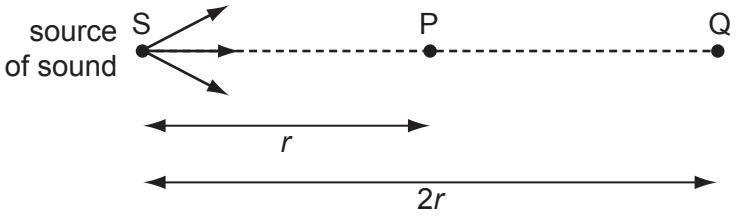

Air molecules at P, a distance r from S, oscillate with amplitude 8.0 μm.

Point Q is situated a distance $2r$ from S.

What is the amplitude of oscillation of air molecules at Q?

A 1.4 μm **B** 2.0 μm **C** 2.8 μm **D** 4.0 μm

© UCLES 2008

27 Sound waves, emitted by a small loudspeaker, are reflected by a wall.

The frequency f of the waves is adjusted until a stationary wave is formed with the antinode nearest the wall at a distance x from the wall.

Which expression gives f in terms of x and the speed of sound c?

A $f = \frac{4c}{x}$ **B** $f = \frac{2c}{x}$ **C** $f = \frac{c}{2x}$ **D** $f = \frac{c}{4x}$

28 A diffraction grating has N lines per unit length and is placed at 90° to monochromatic light of wavelength λ.

What is the expression for θ, the angle to the normal to the grating at which the third order diffraction peak is observed?

A $\sin\theta = \frac{1}{3N\lambda}$ **B** $\sin\theta = 3N\lambda$ **C** $\sin\theta = \frac{N\lambda}{3}$ **D** $\sin\theta = \frac{3\lambda}{N}$

29 Light of wavelength 700 nm is incident on a pair of slits, forming fringes 3.0 mm apart on a screen.

What is the fringe spacing when light of wavelength 350 nm is used and the slit separation is doubled?

A 0.75 mm **B** 1.5 mm **C** 3.0 mm **D** 6.0 mm

30 An electron enters the space between two parallel charged plates with an initial velocity u.

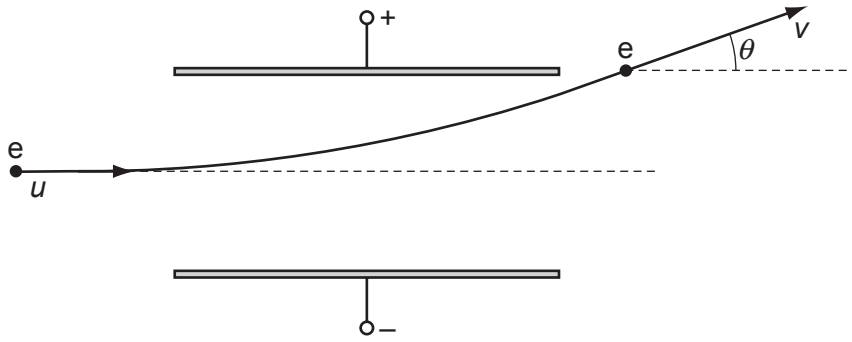

While in the electric field, its direction changes by θ and it emerges with a velocity v.

What is the relation between v and u?

A $v = \frac{u}{\cos\theta}$ **B** $v = u\cos\theta$ **C** $v = \frac{u}{\sin\theta}$ **D** $v = u\sin\theta$

© UCLES 2008

31 The diagram shows an oil droplet that has become charged by gaining five electrons. The droplet remains stationary between charged plates.

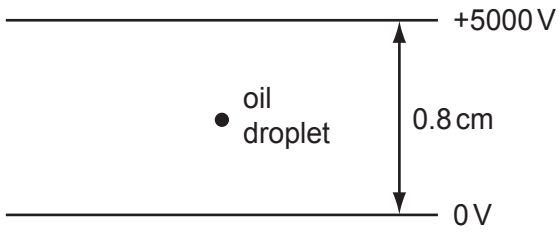

What is the magnitude and direction of the electrostatic force on the oil droplet?

A 5.0×10^{-15} N upwards

B 5.0×10^{-15} N downwards

C 5.0×10^{-13} N upwards

D 5.0×10^{-13} N downwards

32 A power cable X has a resistance R and carries current I.

A second cable Y has a resistance $2R$ and carries current $\frac{1}{2}I$.

What is the ratio $\frac{\text{power dissipated in Y}}{\text{power dissipated in X}}$?

A $\frac{1}{4}$ **B** $\frac{1}{2}$ **C** 2 **D** 4

33 A total charge of 100 C flows through a 12 W light bulb in a time of 50 s.

What is the potential difference across the bulb during this time?

A 0.12 V **B** 2.0 V **C** 6.0 V **D** 24 V

34 Two copper wires X and Y have the same volume. Wire Y is four times as long as wire X.

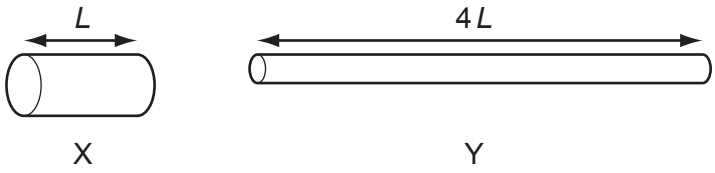

What is the ratio $\frac{\text{resistance of wire Y}}{\text{resistance of wire X}}$?

A 4 **B** 8 **C** 16 **D** 64

© UCLES 2008

35 The potential difference across a resistor is 12 V. The current in the resistor is 2.0 A.

4.0 C passes through the resistor.

What is the energy transferred and the time taken?

	energy / J	time / s
A	3.0	2.0
B	3.0	8.0
C	48	2.0
D	48	8.0

36 A thermistor and another component are connected to a constant voltage supply. A voltmeter is connected across one of the components. The temperature of the thermistor is then reduced but no other changes are made.

In which circuit will the voltmeter reading increase?

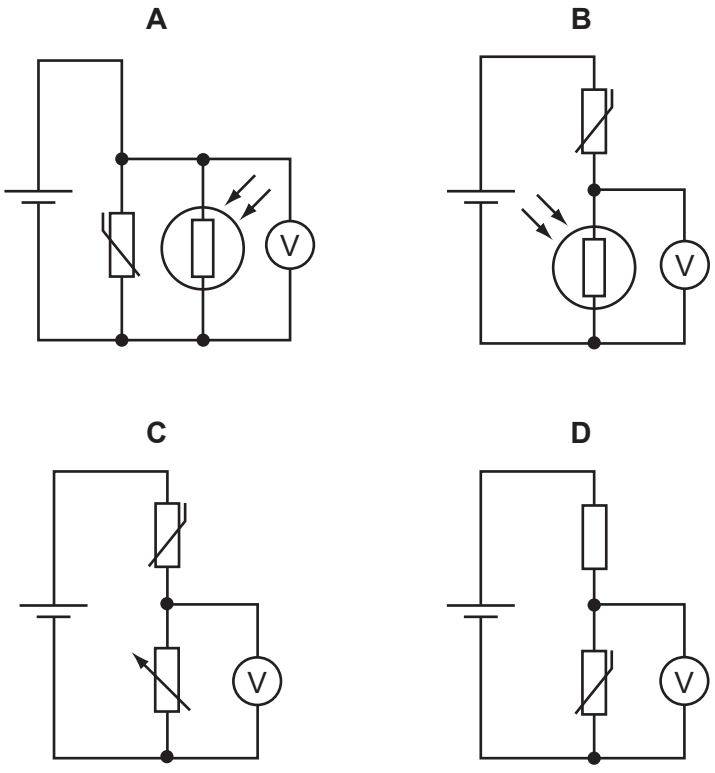

37 In the circuit shown, the 6.0 V battery has negligible internal resistance. Resistors R_1 and R_2 and the voltmeter have resistance 100 kΩ.

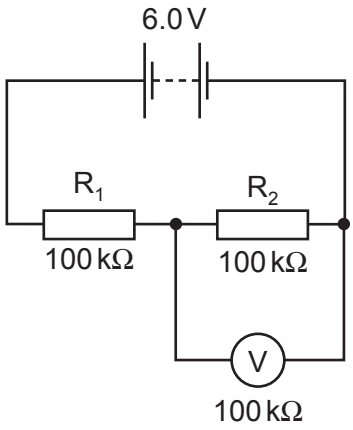

What is the current in the resistor R_2?

A 20 μA **B** 30 μA **C** 40 μA **D** 60 μA

38 The unknown e.m.f. *E* of a cell is to be determined using a potentiometer circuit. The balance length is to be measured when the galvanometer records a null reading.

What is the correct circuit to use?

A

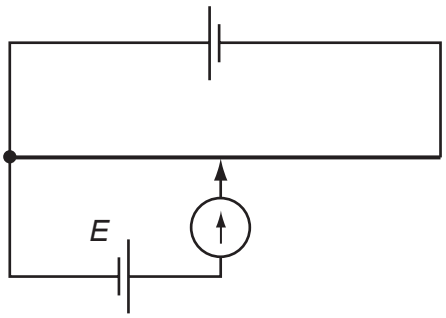

B

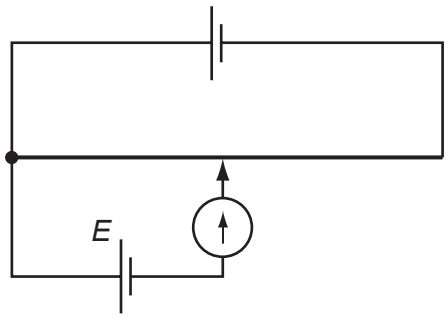

C

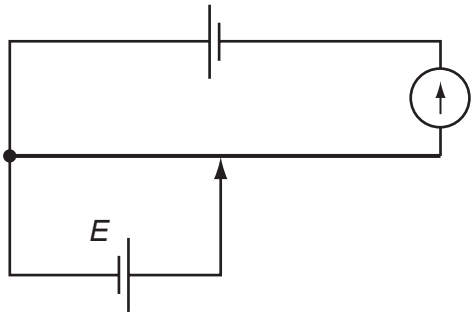

D

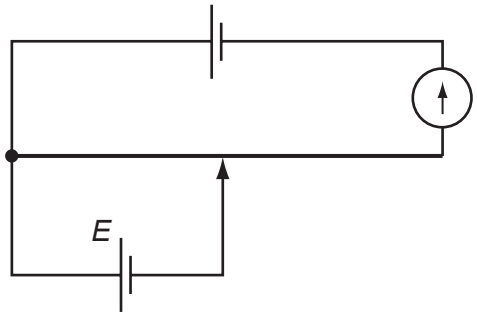

© UCLES 2008

39 What is the approximate mass of a nucleus of uranium?

A 10^{-15} kg **B** 10^{-20} kg **C** 10^{-25} kg **D** 10^{-30} kg

40 A radioactive nucleus is formed by β-decay. This nucleus then decays by α-emission.

Which graph of proton number Z plotted against nucleon number N shows the β-decay followed by the α-emission?

A

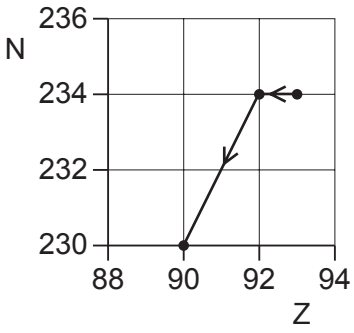

B

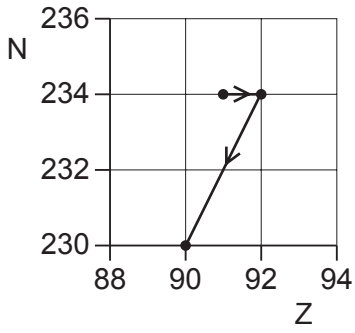

C

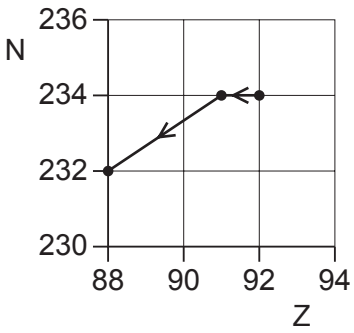

D

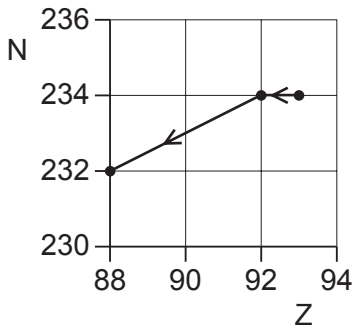

© UCLES 2008

BLANK PAGE

Permission to reproduce items where third-party owned material protected by copyright is included has been sought and cleared where possible. Every reasonable effort has been made by the publisher (UCLES) to trace copyright holders, but if any items requiring clearance have unwittingly been included, the publisher will be pleased to make amends at the earliest possible opportunity.

University of Cambridge International Examinations is part of the Cambridge Assessment Group. Cambridge Assessment is the brand name of University of Cambridge Local Examinations Syndicate (UCLES), which is itself a department of the University of Cambridge.